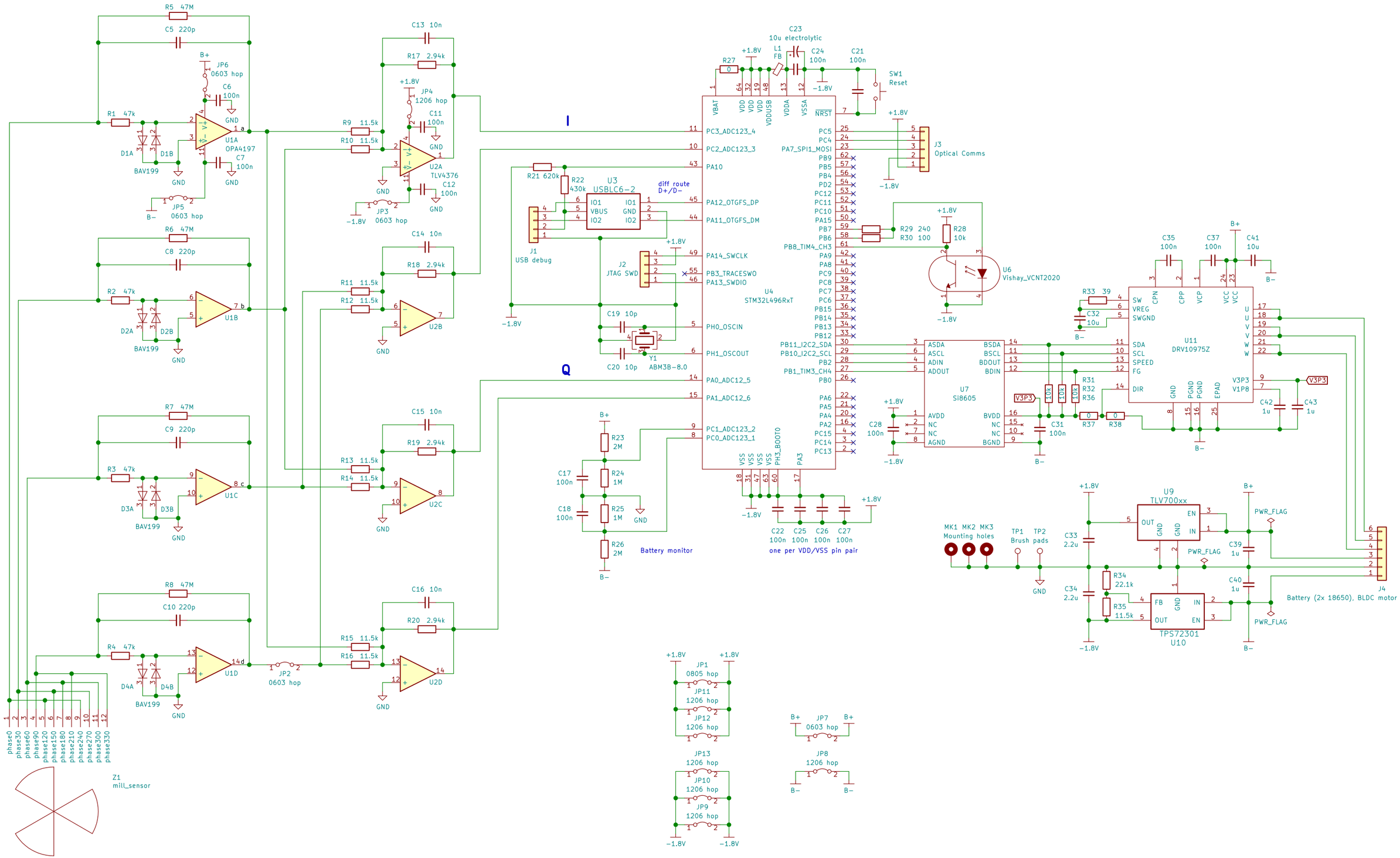
U1A OPA4197
U2A TLV4376
U3 USBLC6-2
diff route D+/D−
U4 STM32L496RxT
U7 Si8605
U11 DRV10975Z
U9 TLV700xx
TPS72301 U10
U6 Vishay_VCNT2020
J3 Optical Comms
J4 Battery (2x 18650), BLDC motor
J1 USB debug
J2 JTAG SWD
Y1 ABM3B-8.0
Battery monitor
one per VDD/VSS pin pair
Z1 mill_sensor
Mounting holes
Brush pads
SW1 Reset
I
Q